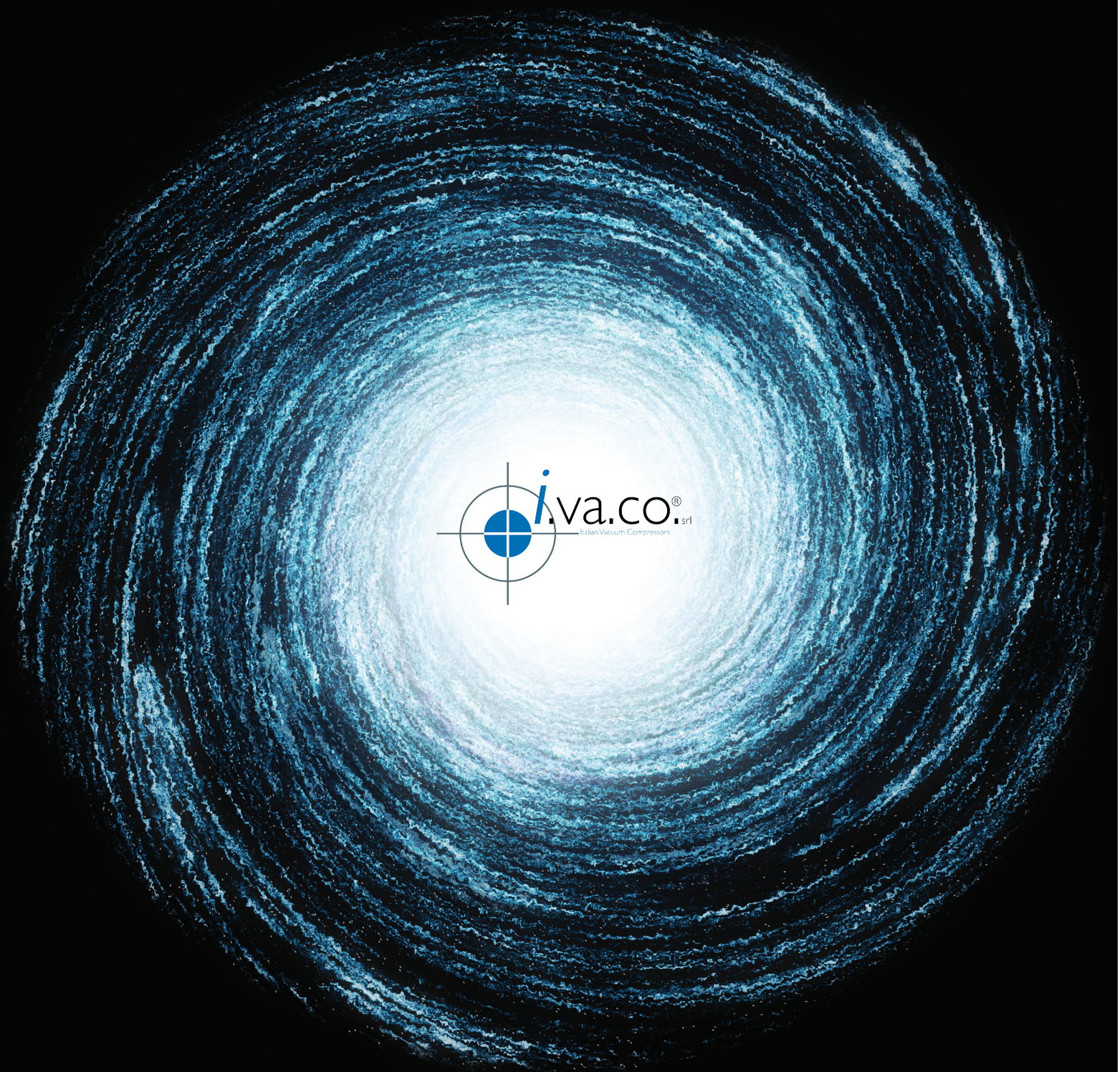

IVACO FANS DIVISION

SOFFIANTI
A CANALE
BLOWERS

SOFFIATORI
A LOBI
COMPRESSORS

DIFFUSORI
DIFFUSERS

VENTILATORI INDUSTRIALI

INDUSTRIAL FANS

POMPE AD
ANELLO LIQUIDO
LIQUID RING
VACUUM PUMPS

POMPE A UNCINO
CLAW PUMPS

POMPE A PALETTE
A SECCO
DRY ROTARY VANE

POMPE A PALETTE
LUBRIFICATE
OIL ROTARY VANE

TURBO SOFFIANTI
TURBO BLOWERS

La casa madre

I.VA.CO. Srl ha sede a Paderno d'Adda (LC) e opera nel settore Air & Gas. Le linee di prodotto principali sono rappresentate da compressori e aspiratori a canale laterale, pompe per vuoto sia ad anello liquido che rotative e ventilatori industriali.
L'affiatamento del team e le competenze sviluppate nel settore hanno portato l'azienda a raggiungere eccellenti risultati sia sul piano della crescita che economico-finanziario.
Il team I.VA.CO. unisce il talento e la competenza dei singoli e si propone di raggiungere obiettivi sempre più prestigiosi attraverso l'impegno e l'entusiasmo collettivo.
I.VA.CO. distribuisce i propri prodotti affidabili e tecnicamente all'avanguardia in tutto il mondo garantendo un supporto preciso e puntuale grazie alla professionalità della sua strutturata rete di vendita.

La nostra missione:
Offrire ai nostri partner prodotti affidabili.
Cercare e proporre nuove soluzioni che soddisfino ogni esigenza.
Superare gli standard qualitativi raggiunti al fine di far fronte a qualunque richiesta proveniente dal mercato.

The headquarter

I.VA.CO. Srl, based in Paderno d'Adda (LC), operates in the Air & Gas market. The main product lines include side channel blowers and compressors, liquid ring and rotary vacuum pumps and industrial fans.
The synergy of the team and the skills developed in the field have led the company to achieve excellent results both in terms of growth as well as economic and financial results.
I.VA.CO. combines the talent and competence of each team member and aims to achieve increasingly prestigious results through the collective commitment and enthusiasm.
I.VA.CO. distributes its reliable and technically advanced products all over the world by ensuring precise and punctual support thanks to the professionalism of its structured sales network.

Our mission:
Providing reliable products to our partners.
Looking for and propose new solutions that satisfy every need.
Exceeding reached quality standards in order to meet any request from the market.

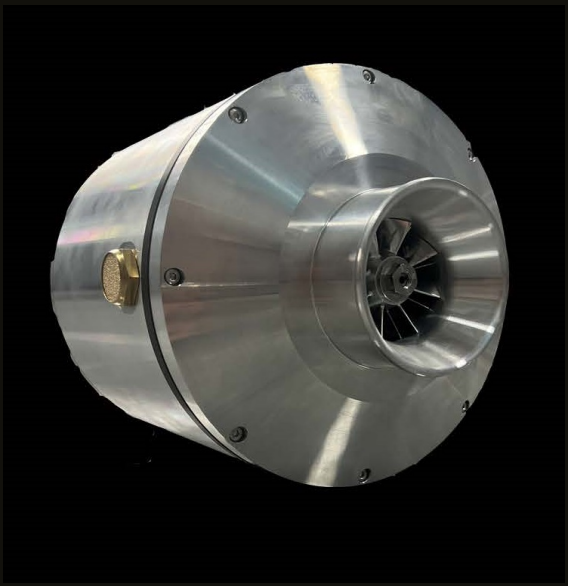

La capacità di proporre soluzioni

I.F.D. Ivaco Fans Division Srl è una consociata fondata per sfruttare le opportunità di mercato nel settore della ventilazione industriale.
L'attività di I.F.D. Srl si fonda sulla progettazione, costruzione e vendita di ventilatori industriali standard ma soprattutto sullo studio e realizzazione di soluzioni speciali ideate su richiesta del cliente.
Nella sua sede di Paderno d'Adda (in provincia di Lecco) il team di vendita I.F.D. mette a disposizione l'esperienza e le conoscenze acquisite negli anni al fine di migliorare l'offerta e garantire un servizio rapido ed efficiente su scala nazione ed internazionale.

The ability to offer solutions

I.F.D. Ivaco Fans Division Srl is a sister company aimed at taking advantages of market opportunities in the industrial ventilation sector.
I.F.D. Srl activity is based on the design, construction and sale of standard industrial fans but above all on the study and implementation of special solutions designed upon customers' requests.
In its headquarters, based in Paderno d'Adda (near Lecco), I.F.D.'s sales team provide its experience and knowledge acquired over the years in order to improve the offer and ensure a rapid and efficient service on a national and international scale.

I Turbo Ventilatori della serie IA sono macchine rotanti di nuova concezione che rappresentano l'evoluzione sia dei ventilatori centrifughi che dei compressori centrifughi. La forma della girante garantisce una maggiore efficienza e consente di ridurre il consumo di energia fino al 40%. Le dimensioni di ingombro sono ridotte e garantiscono una maggiore resistenza meccanica dell'intera macchina.

The Turbo-Fans IA series are rotating machines of new concept that represent the evolution of both centrifugal fans and compressors. The impeller shape grants a higher efficiency and allows to reduce the energetical consuption up to 40% . Overall dimensions are reduced and able to grant higher mechanical strength of the entire equipment.

Caratterische tecniche:

- Motore elettrico ad alta velocità fino a 55 kW di potenza installata
- Raffreddamento del motore mediante aria forzata
- Giranti in AISI304
- Velocità fino a 35.000 rpm
- Turbo soffiatore in AISI304

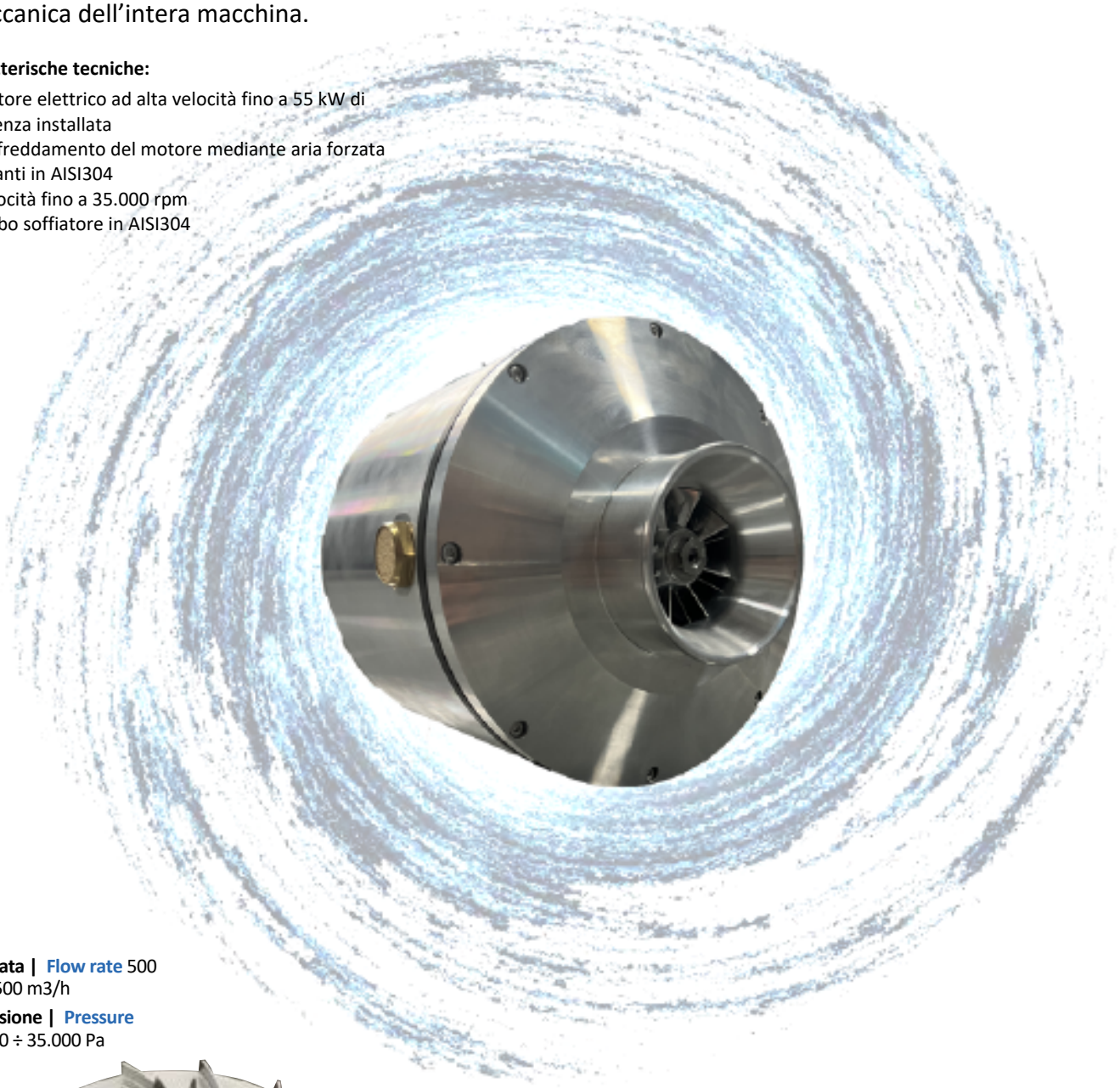

IA

Portata | Flow rate 500 ÷ 2.500 m3/h

Pressione | Pressure 1.000 ÷ 35.000 Pa

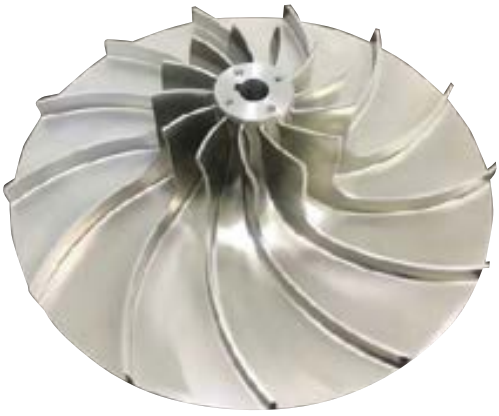

Technical characteristics:

- Electrical, high speed up to 55 kW of installed power motors
- Fan-powered air cooling system
- Impeller in SS304
- Speed up to 40.000 rpm
- Turbo fan in SS304

IA75 - 7.5kW Blower Performance Curve

Medium：Air

Inlet pressure：101kPa

Inlet temperature：20℃

Motor Speed in rpm：21000，24500，28000，31500，35000

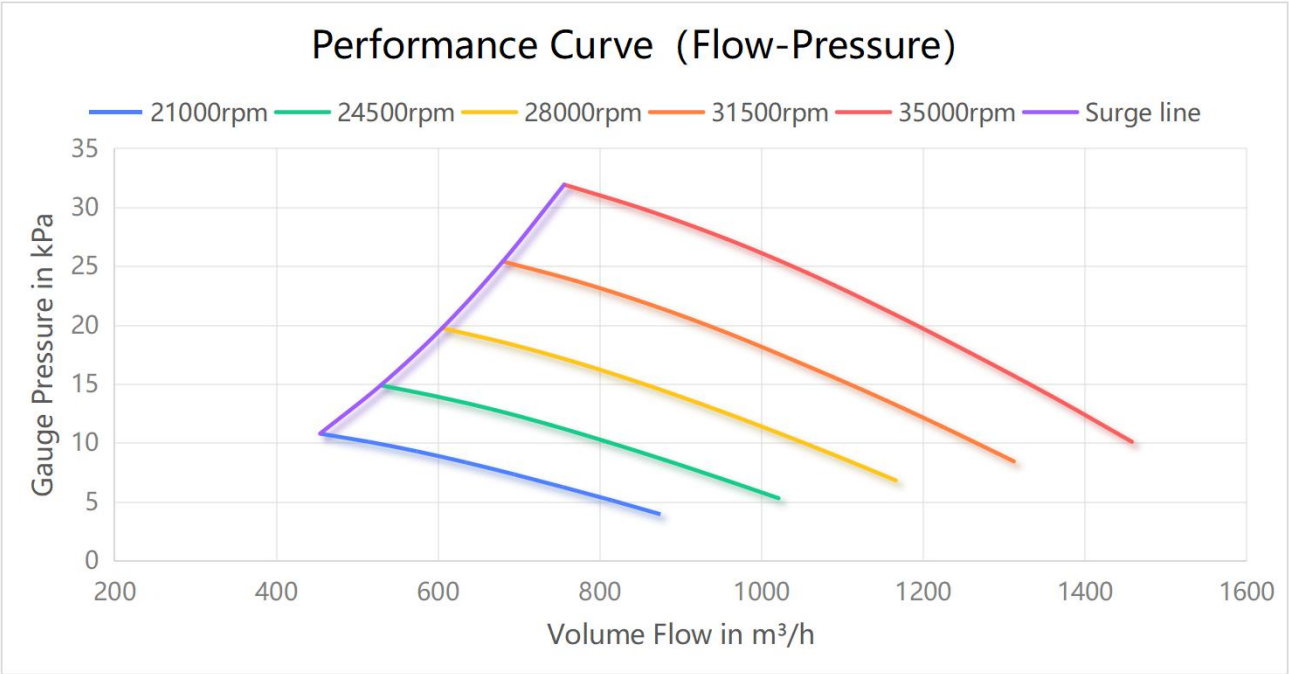

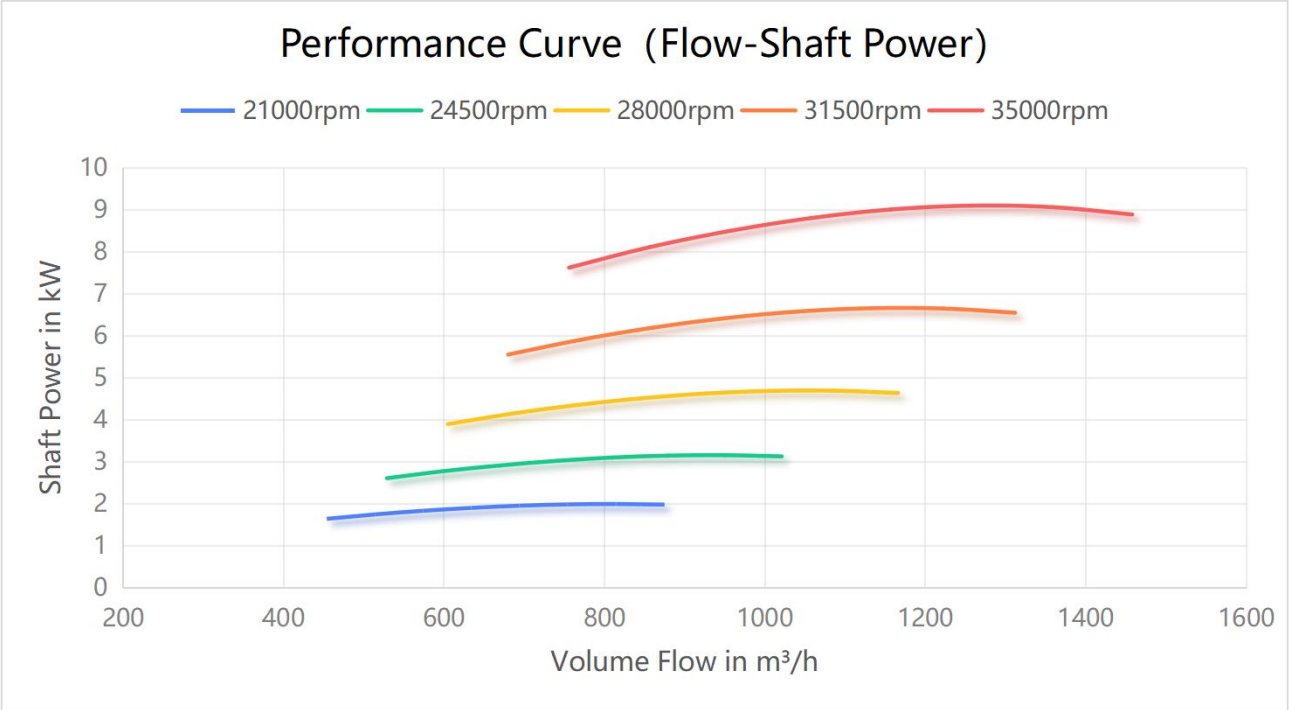

Performance Parameter

Power (kW)	Pressure (kPaG)	Volume Flow (m³/h)
7.5	10	1520
	15	1300
	20	1080

NO.	Name	Model
1	Blower Inlet	**IA75**
2	Blower Outlet	DN100-PN10 GB/T 9119-2010
3	Main Switch	LW30-32A
4	Aviation Plugs/Sockets	DEP2-324 3x6+1x4mm²
5	Touch Panel	-

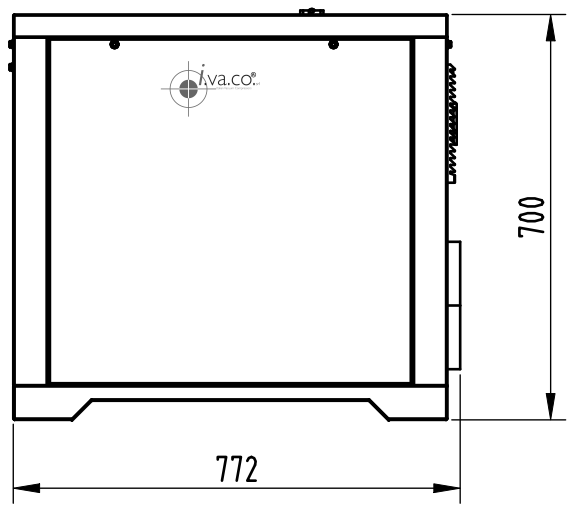

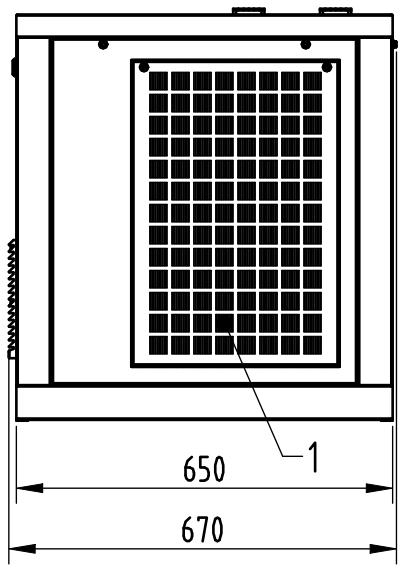

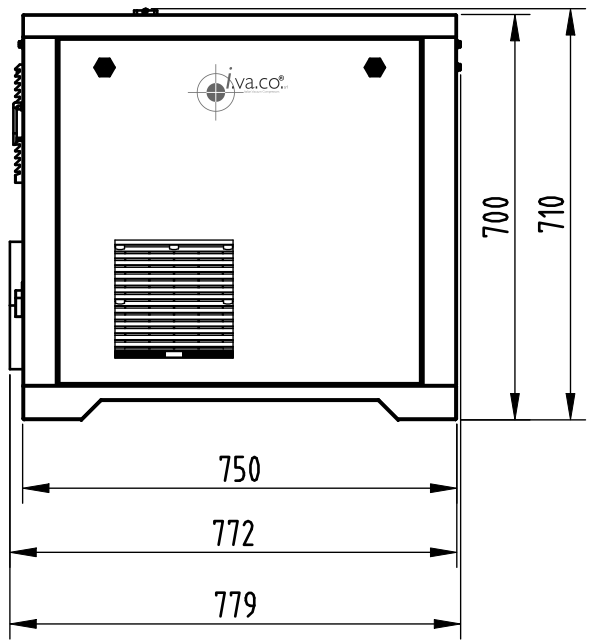

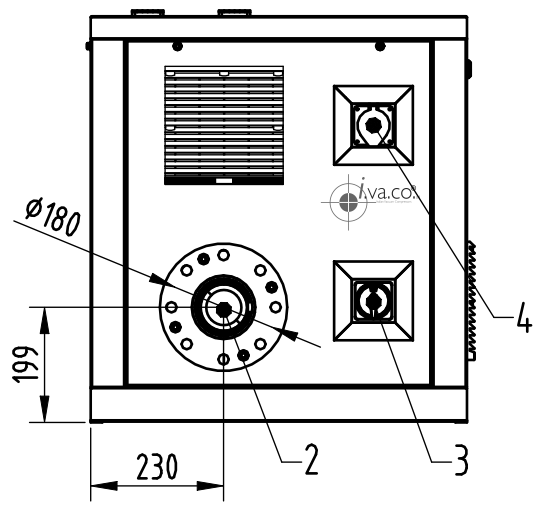

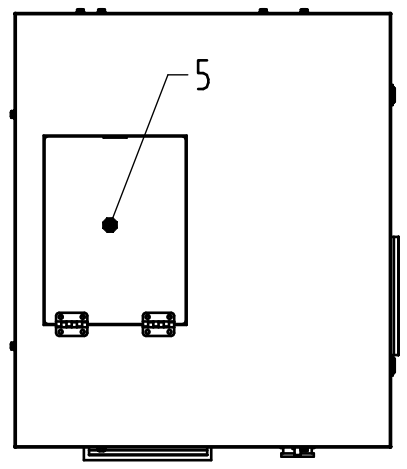

Technical Requirements:

1.The channel between the equipment and the wall shall not be less than 1m, the main channel between the machines shall not be less than 1.5m, and the channel between the air compressor and the auxiliary equipment shall not be less than 1.2m.

2.Our equipment does not serve as the foundation, but the ground must be hardened and flat. If your company has the conditions to make the foundation, the height is recommended to be 100mm, and the four sides are 150mm apart from the equipment.

3.The equipment cover does not have the carrying capacity, do not stress during the transfer process.

4.Please do not disassemble any parts of the blower, if you have any question, please call the dealer.

5.The machine must be safely grounded.

	Material	Part No.			IA75 - OUTLINE DRAWING	
iva.co® srl Italian Vacuum Compressors		Size	Scale	Weight		Rev. A
		A3	1:13			Sheet 1 of 1

IA110 - 11kW Blower Performance Curve

Medium：Air

Inlet pressure：101kPa

Inlet temperature：20℃

Motor Speed in rpm：19800，23100，26400，29700，33000

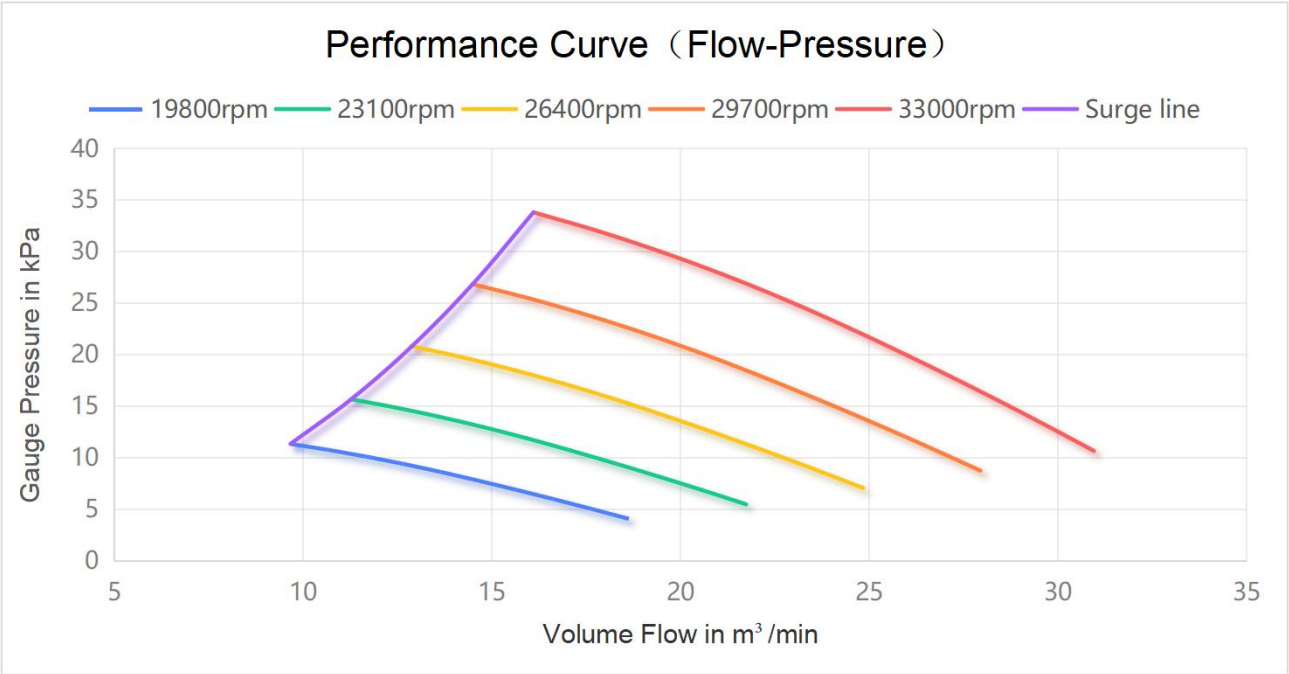

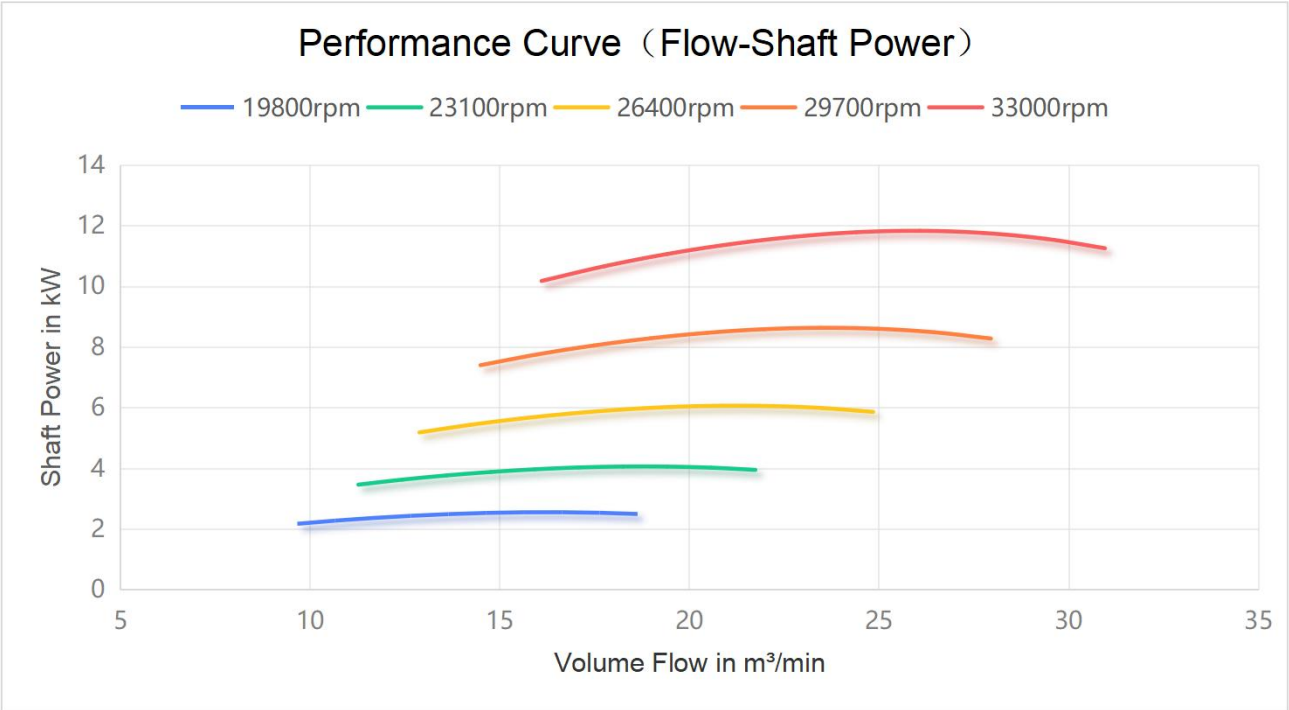

Performance Parameter

Power (kW)	Pressure (kPaG)	Volume Flow (m³/h)
11	10	1800
	20	1430
	30	1200
	32	1000

NO.	Name	Model
1	Blower Inlet	IA110
2	Blower Outlet	DN100-PN10 GB/T 9119-2010
3	Main Switch	LW30-32A
4	Aviation Plugs/Sockets	DEP2-324 3x6+1x4mm²
5	Touch Panel	-

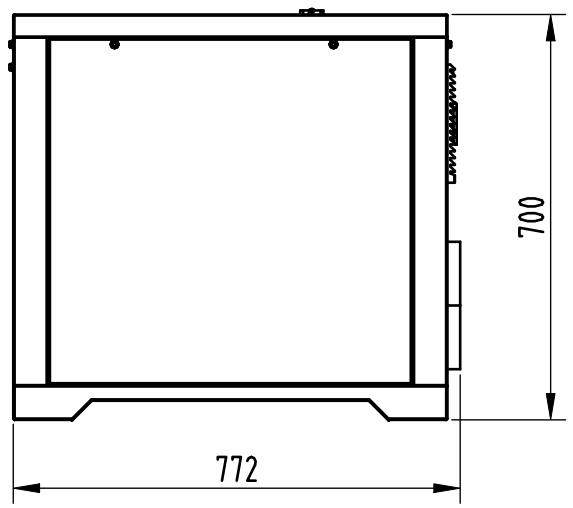

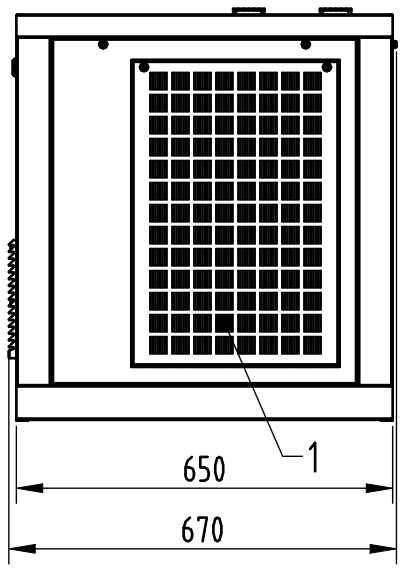

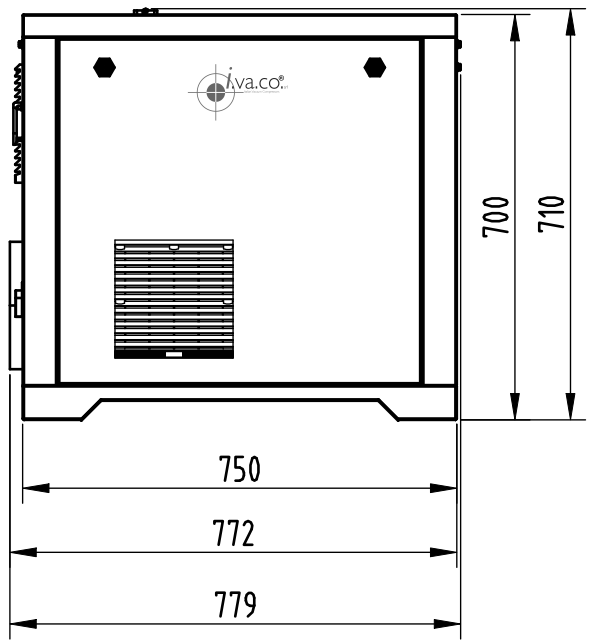

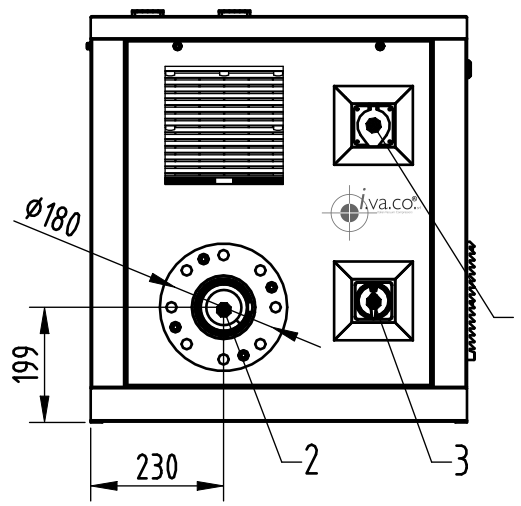

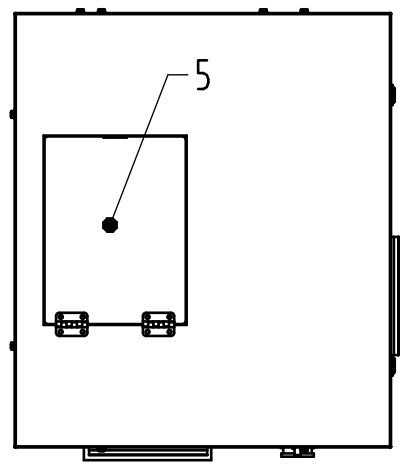

Technical Requirements:

1. The passage between the equipment and the wall shall not be less than 1m, the main passage between machines shall not be less than 1.5m, and the passage between the blower and uxiliary equipment shall not be less than 1.2m

2. Our equipment does not require foundation, but the ground must be hardened and flat. If your company has the conditions to make a foundation, the height is recommended to be 100mm, and the four sides of the equipment are 150mm each

3. The equipment canopy does not have load-bearing capacity, please do not press it heavily during the transfer process

4. Please do not disassemble or assemble the parts of the blower without permission. If you have any questions, please call the dealer

5. The entire machine must be safely grounded

Material	Part No.			11kW OUTLINE DRAWING	
	Size	Scale	Weight	Drawing No.	Rev. A
	A3	1:13			Sheet 1 of 1

IA115 - 15kW Blower Performance Curve

Medium：Air

Inlet pressure：101kPa

Inlet temperature：20℃

Motor Speed in rpm：17400，20300，23200，26100，29000

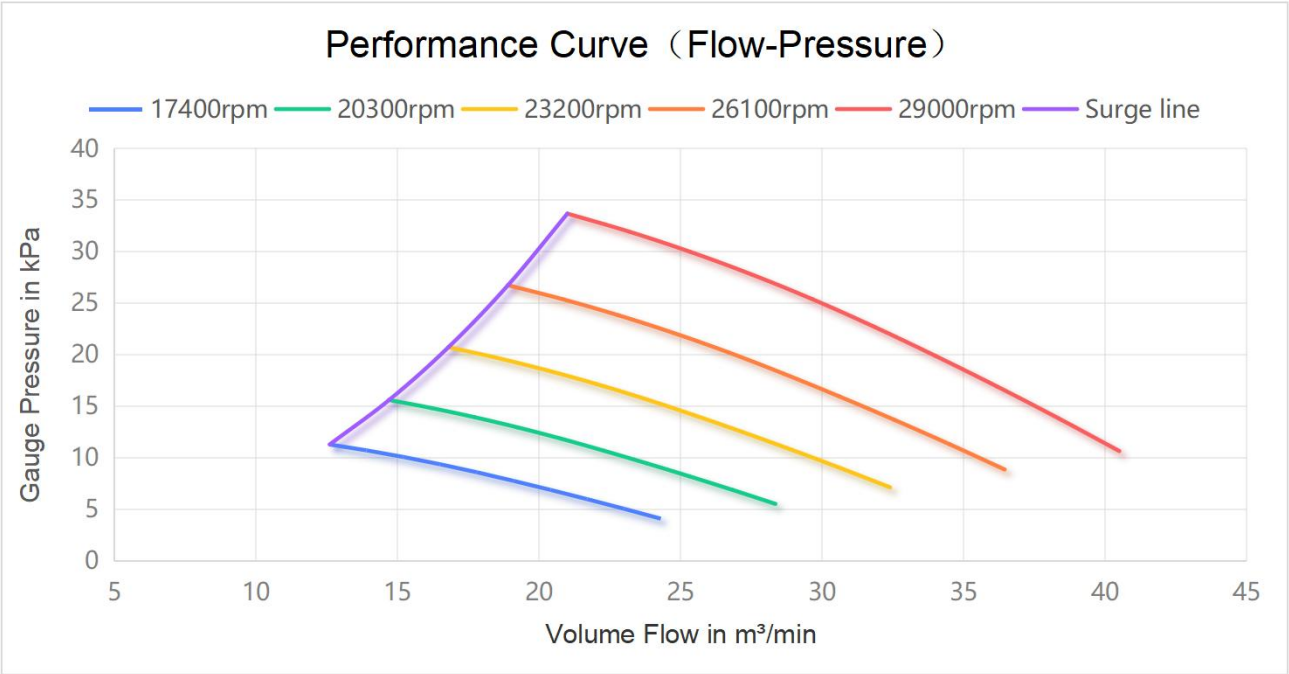

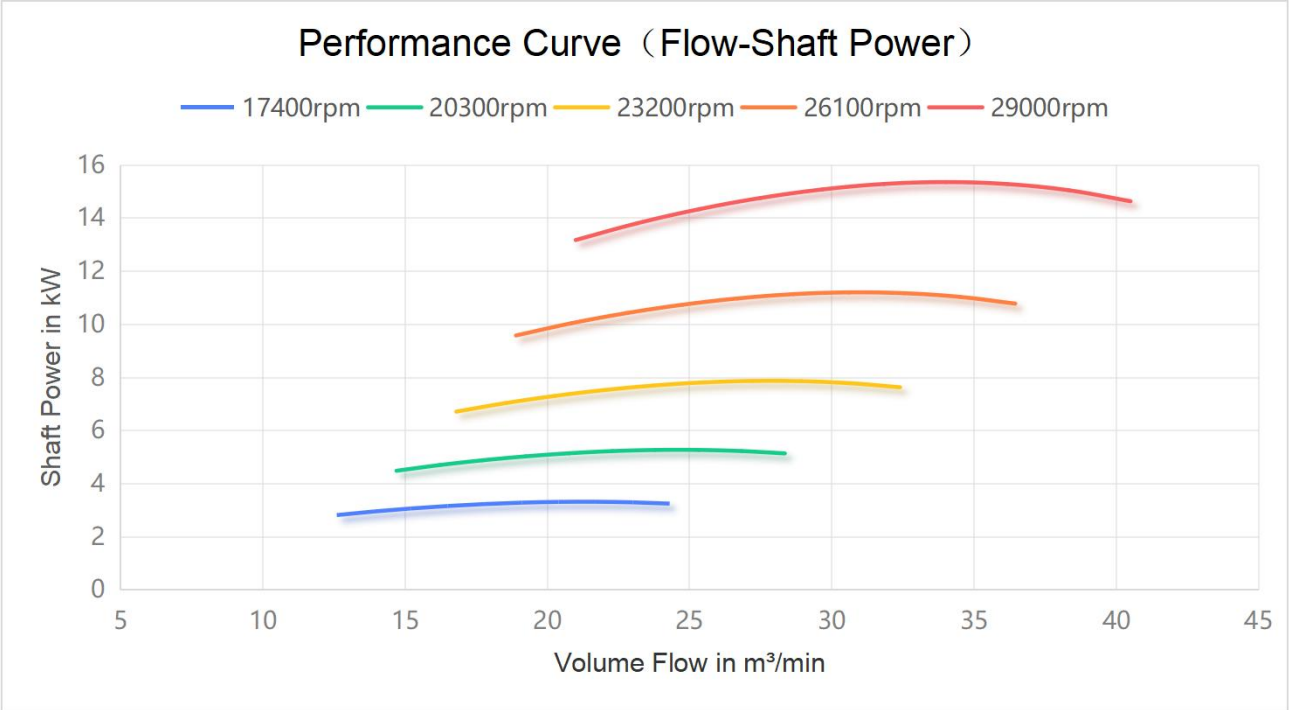

Performance Parameter

Power (kW)	Pressure (kPaG)	Volume Flow (m³/h)
15	14	2300
	20	2040
	26	1680
	30	1500

NO.	Name	Model
1	Blower Inlet A	**IA115**
2	Aviation Plugs/Sockets	DEP2-324 3x10+1x6mm²
3	Main Switch	LW30-32A
4	Blower Inlet B	–
5	Blower Outlet	DN150-PN10 GB/T 9119-2010
6	Touch Panel	-

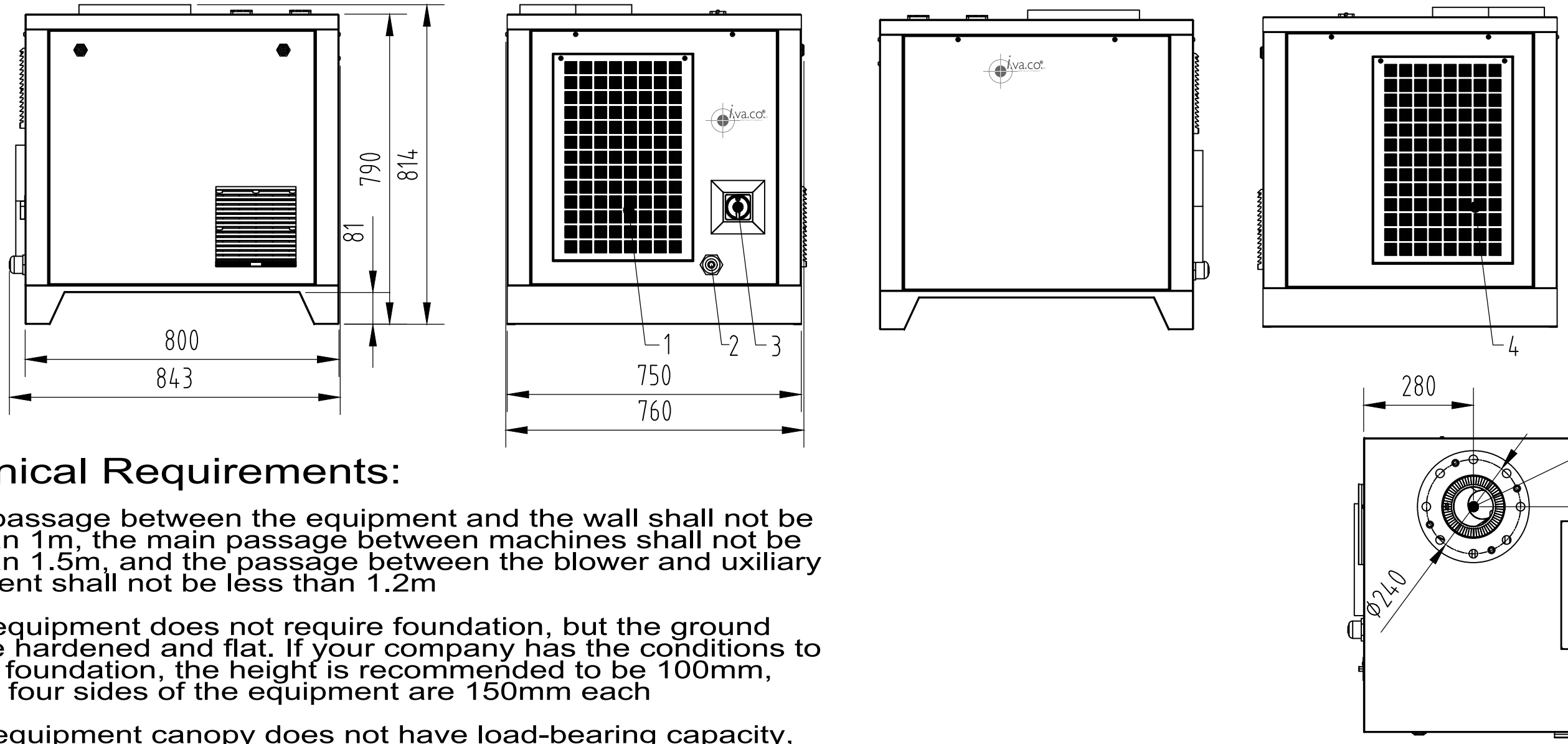

Technical Requirements:

1. The passage between the equipment and the wall shall not be less than 1m, the main passage between machines shall not be less than 1.5m, and the passage between the blower and uxiliary equipment shall not be less than 1.2m

2. Our equipment does not require foundation, but the ground must be hardened and flat. If your company has the conditions to make a foundation, the height is recommended to be 100mm, and the four sides of the equipment are 150mm each

3. The equipment canopy does not have load-bearing capacity, please do not press it heavily during the transfer process

4. Please do not disassemble or assemble the parts of the blower without permission. If you have any questions, please call the dealer

5. The entire machine must be safely grounded

	Material	Part No.			15kW OUTLINE DRAWING	
iva.co® srl Italian Vacuum Compressors		Size	Scale	Weight	Drawing No.	Rev. A
		A3	1:13			Sheet 1 of 1

IA130 - 30kW Blower Performance Curve

Medium：Air

Inlet pressure：100kPa

Inlet temperature：55℃max

Motor Speed in rpm：24600，28700，32800，36900，41000

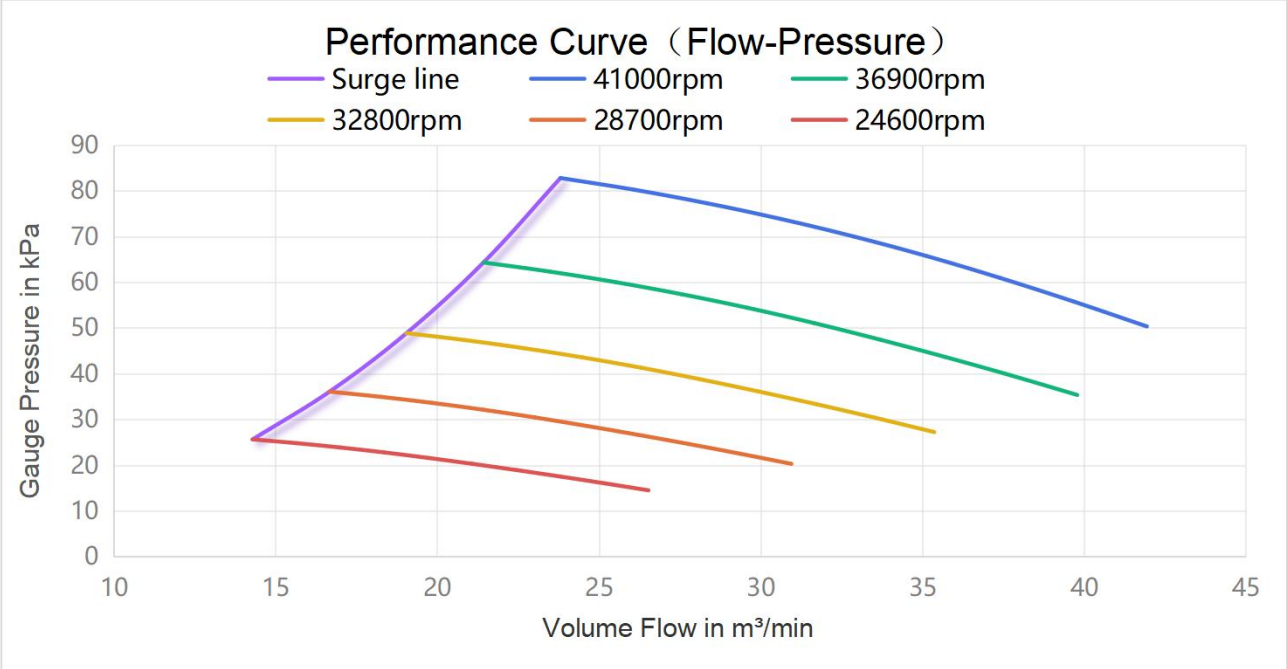

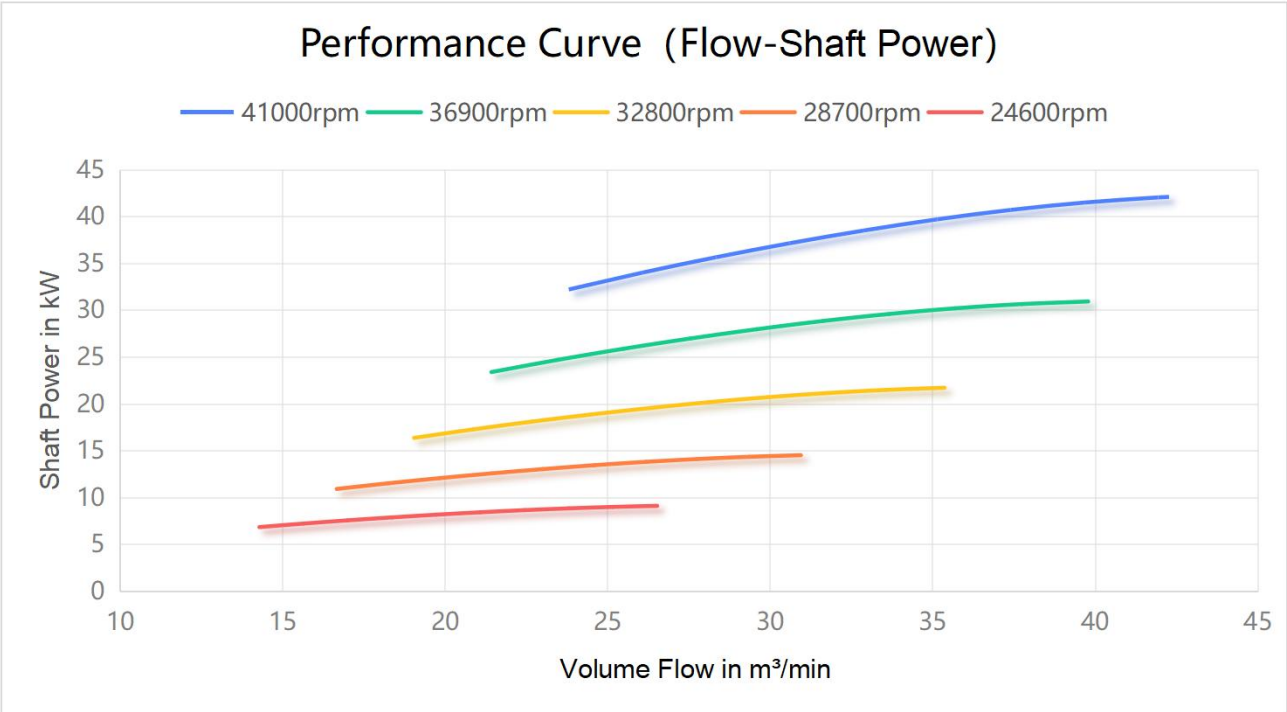

Performance Parameter

Power (kW)	Pressure (kPaG)	Volume Flow (m³/h)
30	20	1200
	30	1600
	40	2000
	50	2400

NO.	Name	Model
1	Blower Inlet A	**100**
2	Aviation Plugs/Sockets	DEP2-324 3x10+1x6mm²
3	Main Switch	LW30-32A
4	Blower Inlet B	DN80
5	Blower Outlet	DN150-PN10 GB/T 9119-2010
6	Touch Panel	>25 mm2

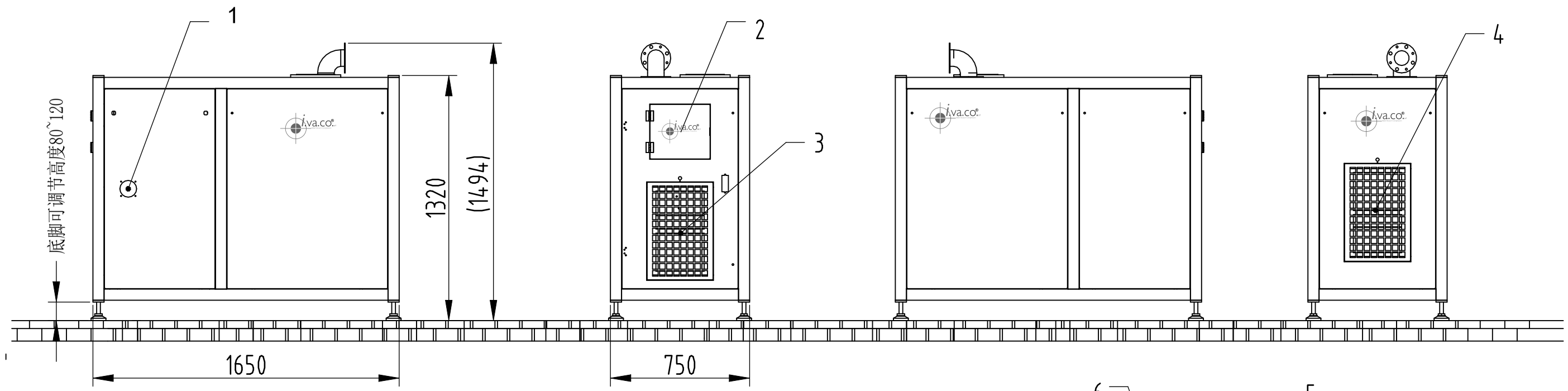

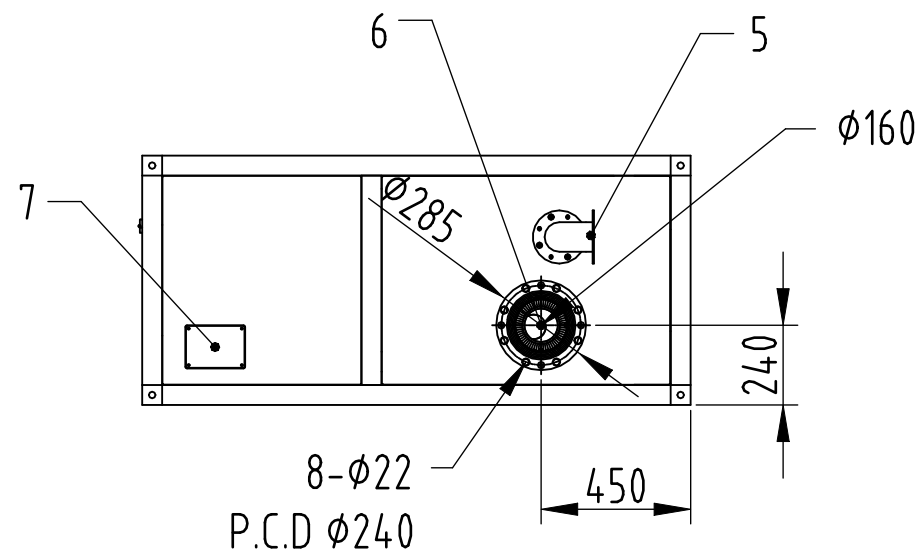

Technical Requirements:

1. The passage between the equipment and the wall shall not be less than 1m, the main passage between machines shall not be less than 1.5m, and the passage between the blower and uxiliary equipment shall not be less than 1.2m

2. Our equipment does not require foundation, but the ground must be hardened and flat. If your company has the conditions to make a foundation, the height is recommended to be 100mm, and the four sides of the equipment are 150mm each

3. The equipment canopy does not have load-bearing capacity, please do not press it heavily during the transfer process

4. Please do not disassemble or assemble the parts of the blower without permission. If you have any questions, please call the dealer

5. The entire machine must be safely grounded

	Material	Part No.			30kW OUTLINE DRAWING	
iva.co® srl Italian Vacuum Compressors		**IA130**				
		Size	Scale	Weight	Drawing No.	Rev. A
		A3	1:13			Sheet 1 of 1

I.VA.CO. IN THE WORLD

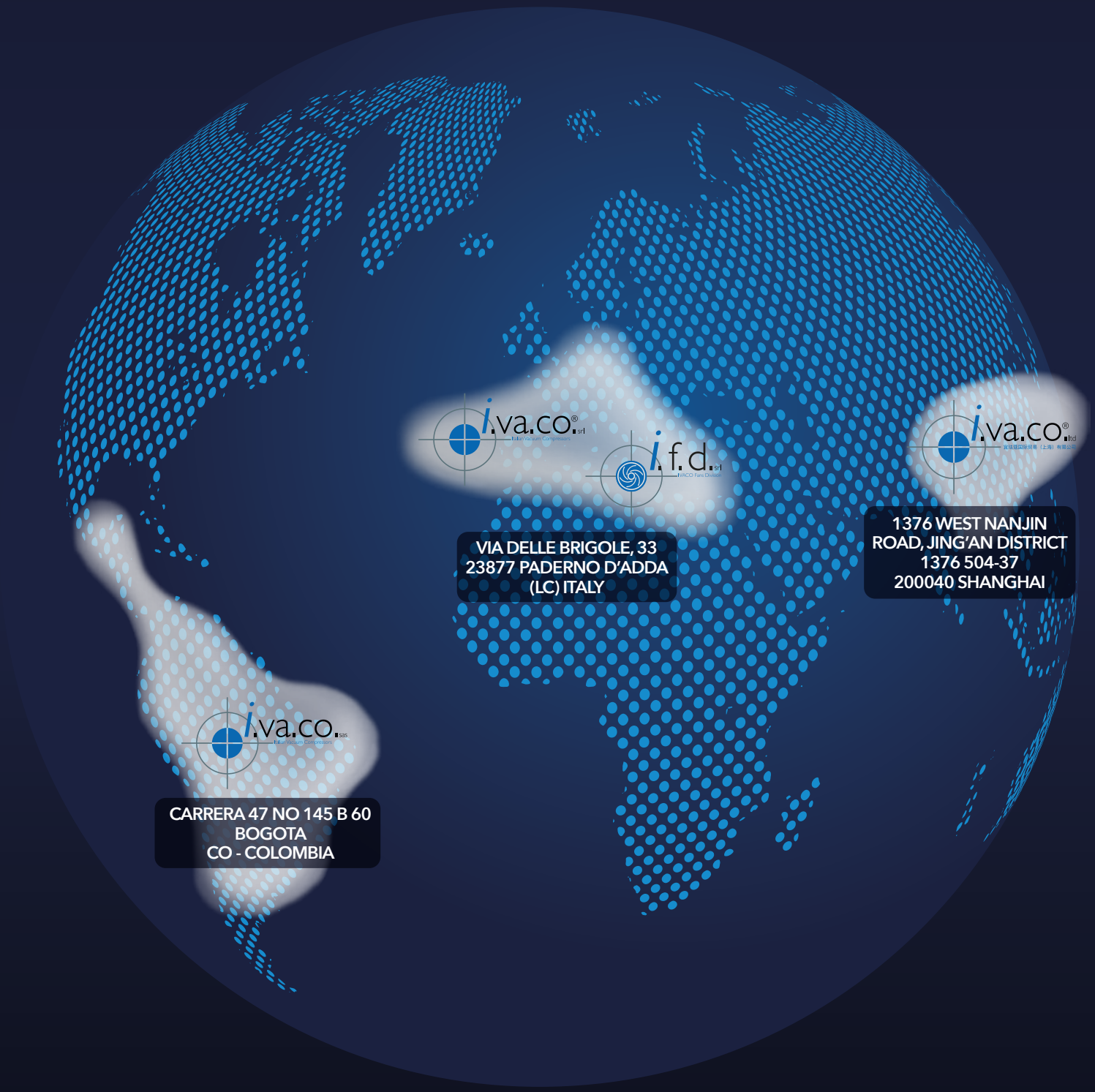

I.VA.CO s.r.l.
Via delle Brigole 33
23877 Paderno d'Adda (LC), Italy
VAT: 09805990968
tel. +39 039 9281084
www.ivaco.it - info@ivaco.it